Customer:

No. KK-2006-2247

Date: Nov. 13, 2006

Attention:

Your ref. No.:

Your Part No.:

SPECIFICATIONS

ALPS' ;

MODEL: RK2711210
(1MB X2)

Spec. No.:

Sample No.: F3509776M

RECEIPT STATUS

RECEIVED

By Date

Signature

Name

Title

DSG'D Y. Ohya

APP'D S. ikenaue

ENG. DEPT. DIVISION

Sales

ALPS
ALPS ELECTRIC CO., LTD.

Head Office
1-7, Yukigaya-otsuka-cho, Ota-ku, Tokyo, 145-8501 Japan
Phone,+81(3)3726-1211

B6523

Q1003#03A (EA)

No. KK-2006-2247

SPECIFICATIONS

1. THIS SPECIFICATIONS APPLY TO RK2711210 POTENTIOMETER.

2. CONTENTS OF THIS SPECIFICATIONS.
   5K272A000H
   K272A004D
   4K-1

3. MARKING
   • MARKING ON ALL UNITS
   DATE CODE, RESIST. VALUE, TAPER

4. REMARKS
   • FURNUSH PACKAGE
   NUT:1 WASHER:1

• CAUTION

Regardless of the suggested applications of these products being introduced in the specifications, when using them for equipment and devices requiring a high degree of safety, respective manufacturers will please preserve safety of the planned equipment and devices by providing necessary protectve circuits and redundancy circuits and reconfirm if safety is being duly preserved.

Products being introduced in the specifications have been designed and manufactured for applications to ordinary electronic equipment and devices such as the AV equipment, electric home appliances, office machines and communications equipment. Consequently, when employing these products for applications requiring a high degree of safety and reliability such as the medical equipment, aviation and aircraft equipment, space equipment and burglar alarm equipment, the using manufacturers will please thoroughly study the proprieties of these products for the planned applications.

Although we are exerting our best efforts to maintain the quality of these products, we cannot guarantee that they will never cause short circuiting and open circuitry.
Therefore, when designing an equipment or device with which the priority is given to the safety, you will please carefully study the influences to the whole equipment of a single function failure of Potentiometers and Encoders in advance to make out a fail-safe design providing.

SPECIFICATIONS

ELECTRICAL

1. Total resistance 1 MΩ ± 30 %
2. Rated voltage 30V A.C.
   This potemtiometer is desinged for A.C. voltage only.
3. Resistance taper: B (HSB01)
4. Residual resistance between terminals
   between terminal 1 & 2 :300 Ω max.
   between terminal 2 & 3 :300 Ω max.
5. Sliding noise : Less than 47mV (Measured by JIS C 6443)
   (Neglected a impulsive noise at the C.W. and C.C.W. ends of position.)
6. Insulation resistance : More than 100 MΩ at 500V D.C.
7. Dielectric strength : Units shall be designed to withstand 500V A.C. 50Hz R.M.S. between resistance element and case for a period of 1 minute without damage or arcing.
8. Gang error : 2 dB max. at 150°
   Measure between (R1&R2)

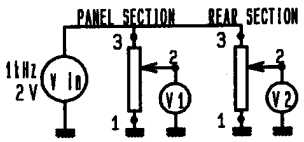

MECHANICAL

1. Total rotational angle 300°±3°
2. Rotational torque 8 - 35 mN·m (Rotational speed 60°/sec. at 20℃)
3. Stopper strength No damage with an application of 0.9 N·m.
4. Resistance to soldering heat After soldering (Less than 350 ℃ and within 5 s.) there shall be no evidnce of poor contact between resistance element and terminals, or any physical damage as a result of the test.
5. Bushing nut tightening strength Tightening torque to be no greater than 1.5 N·m.
   *Pay attention otherwise the strength may not be assured.
6. Push / pull strength No damages with an application of push or pull force 100 N for 10 s.

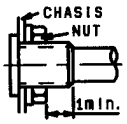

ENDURANCE

1. Rotational life : 15,000 cycles min.

NOTES

1. The items except above mentioned items shall meet or exceed JIS C 6443.
2. Operating temperature: -10 ℃ ~ +70 ℃
3. Storage temperature: -20 ℃ ~ +80 ℃
4. This type is protected against sulfides.

SYMB	DATE	APPD	CHKD	DSGD

ALPS ELECTRIC CO., LTD.

APPD.	CHKD.	DSGD.	TITLE
DESIGN 06.11.14 INEROUE		DESIGN 06.11.14 OHYA	DOCUMENT NO. 5K272A000H

O R

ALPS ELECTRIC CO., LTD

1-7 YUKIGAYA OTSUKA-CHO OTA-KU TOKYO JAPAN

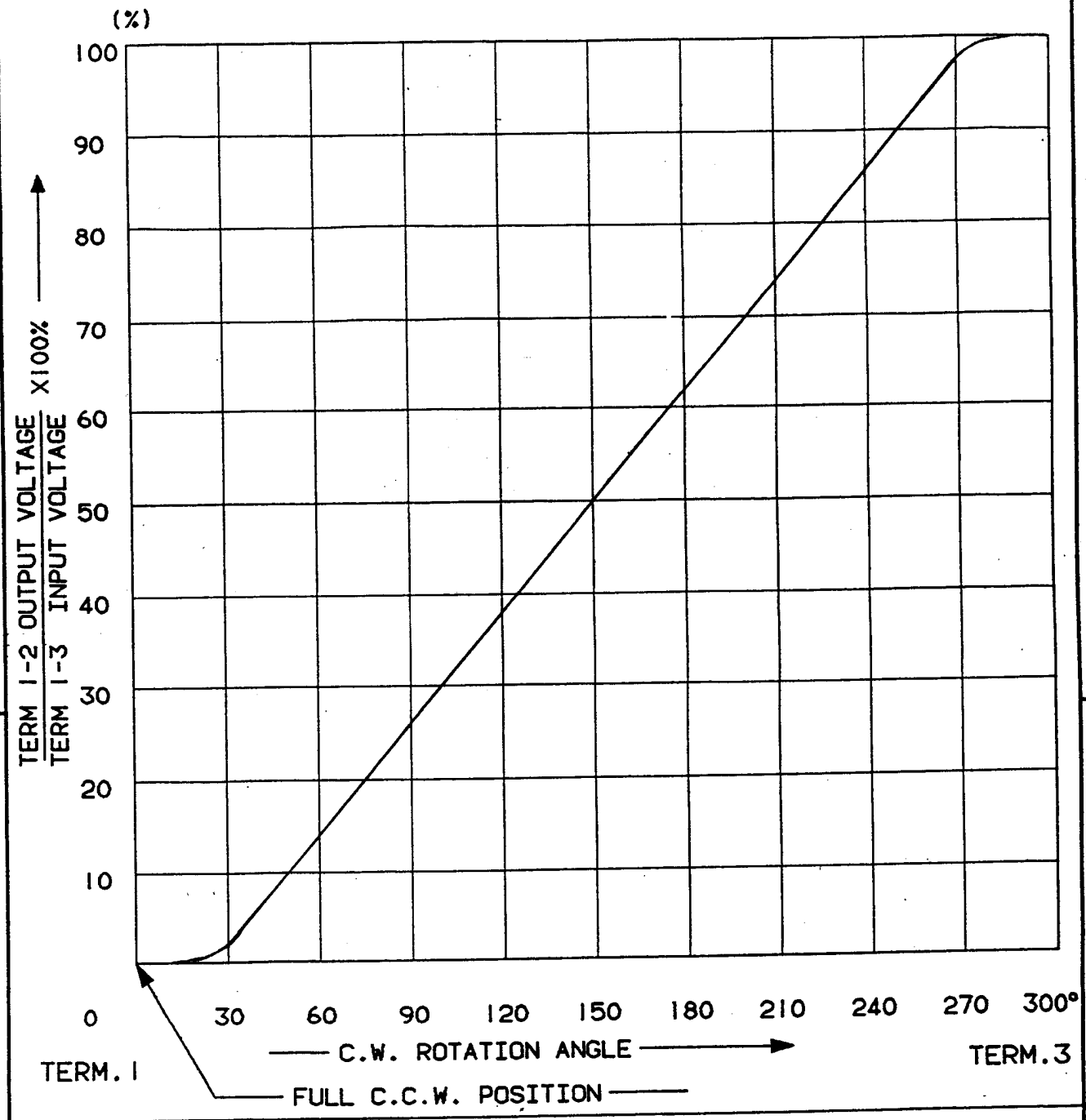

AT 150° C.W. SHAFT ROTATION FROM FULL C.C.W. POSITION, VOLTAGE PERCENT SHALL FALL WITHIN THE LIMITS OF 40 – 60 PERCENT.

SYMB	DATE	APPD	CHKD	DSGD
Original	80-09-13	S.S		Y.O

DSGD: K. Chonan May.10 '96

CHKD.

APPD.: S. Sasaki May 13 '96

SCALE

UNIT: mm

TITLE: RESISTANCE TAPER

DOCUMENT NO. HSB01

TONE

OR

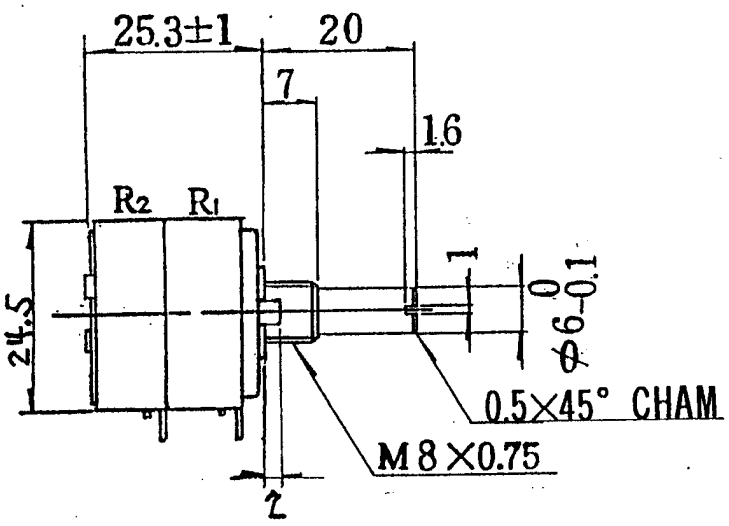

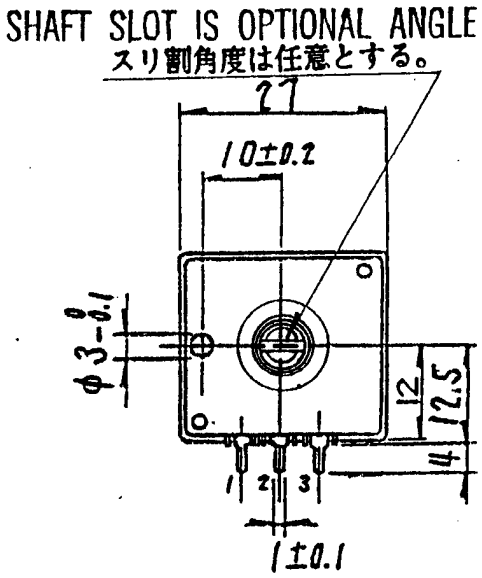

P.W.B.MOUNTING DETAIL
TOLERANCE ±0.1
VIEWED FROM MOUNTING SIDE
取付穴寸法図
許容差±0.1

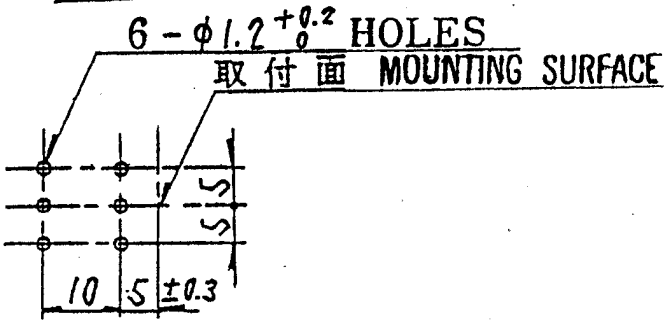

許容差の指定なき寸法の公差 TOLERANCES UNLESS OTHERWISE SPEC	
BASIC DIMENSIONS	TOLERANCE
L≦10	±0.3
10<L<100	±0.5
100≦L	±0.8
角度 ANGULAR DIMENSION	±5°

PART NO.	NAME	MATERIAL NAME & CODE	FINISH	
—	—	—	—	22.79

ALPS ELECTRIC CO., LTD.

SYMB.	DATE	APPD.	CHKD.	DSGD.

UNIT mm | SCALE —

APPD. 62.1.20 | CHKD. 62.1.20 佐藤 | DSGD. 62.1.20 日下

TITLE 1軸2連小型 デテントVR組立図

DOCUMENT NO. K272A004D 1989. 4. 4

(A4・図画用紙) W0301-B A4 61.11. 10 000 SR

< はんだ付け時のご注意事項 >

図のようにP. W. Bの上面に はんだ付けをする配線は、
お避け下さい。

Caution for soldering

Please avoid soldering on upper surface of P.W.B. as shown

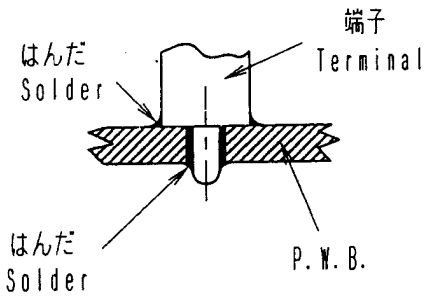

SYMB	DATE	APPD	CHKD	DSGD

ALPS ELECTRIC CO., LTD.

APPD.	CHKD.	DSGD.	TITLE
1-設1 '96.1.11 吉岡	1-設1 '96.1.11 佐藤	1-設1 '96.1.11 大矢	DOCUMENT NO. 4K-1

OR